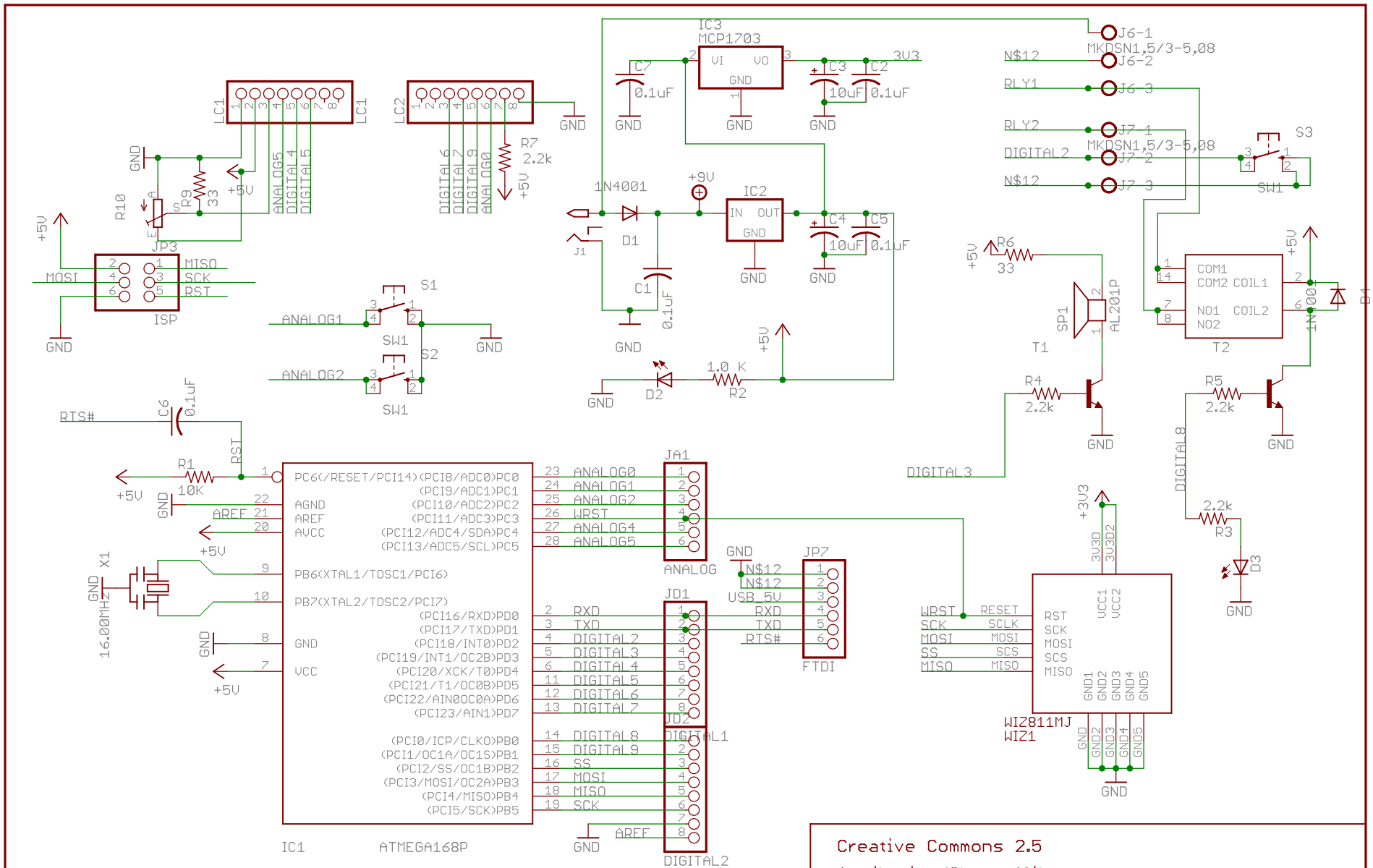

Creative Commons 2.5
Attribution/Share-Alike

TITLE: itg

Document Number:

REV: v1.2

Date: 3/7/2010 8:34:32 PM

Sheet: 1/1